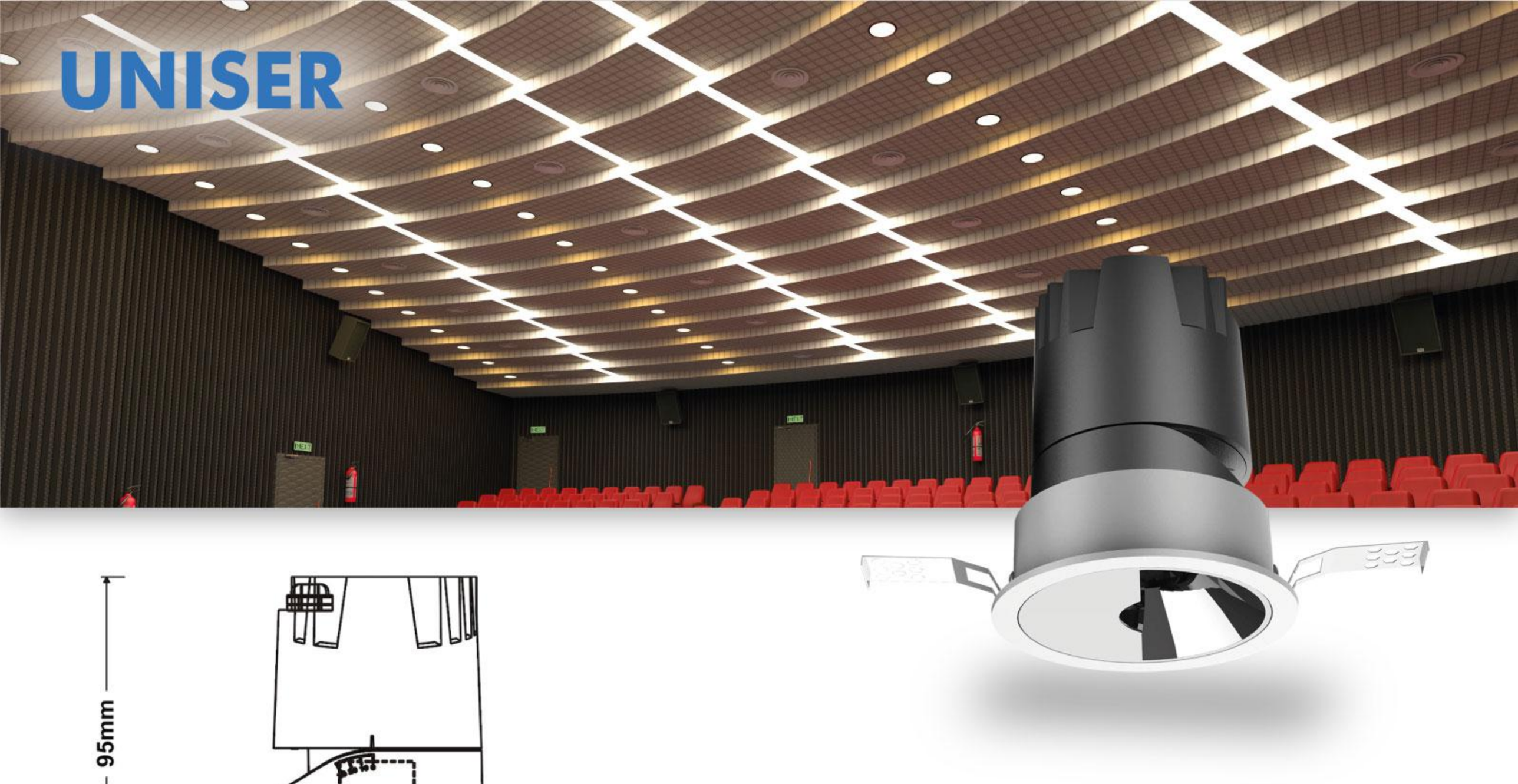

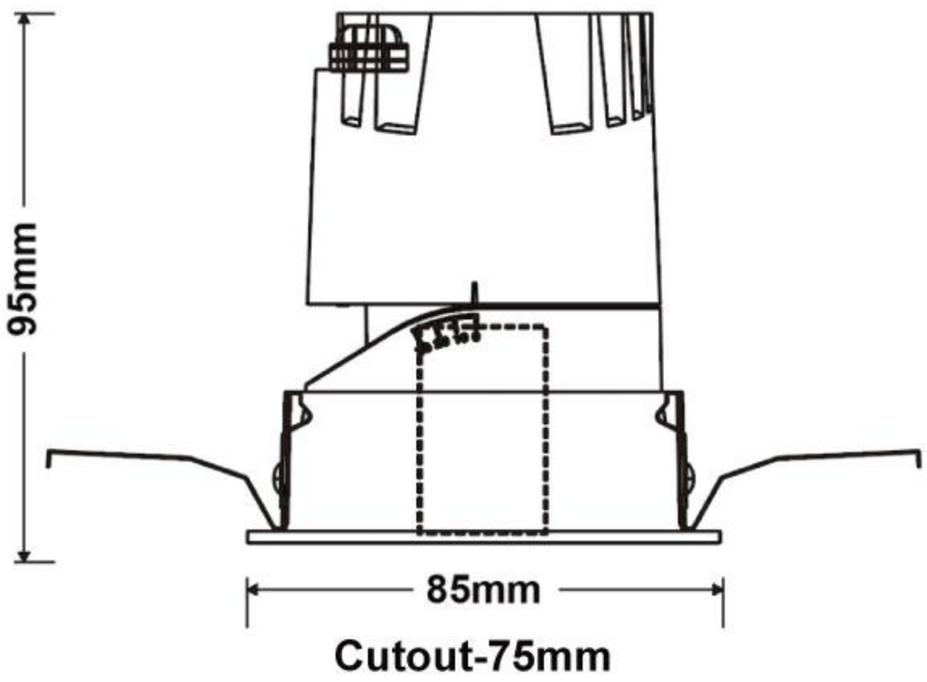

Body Finish

Black | White

Reflector Finish

Black | White | Gun metal | Rose Gold

Champagne Gold | Matt Black | Matt White | Matt Silver

FLEXI DELTA PRO SERIES - WALLWASHER

Description : Asymmetric Wallwasher	**Material :** Aluminum
Product Code : UHLS-FDP-WW-16	**Lumens :** 110lm / W
Additional Features : Scallup- Free Wallwasher	**Tiltable Angle** : 30D
Wattages : 16W	**Life Expectancy :** 50000 Burning Hrs
Beam Angle : 12D / 24D / 38D / 60D	**IP :** 20
CCT : 3000K to 6000K	**Control :** Non Dimmable | Phase-cut | Analog | Dali | CCT tunable
CRI : 80 / 90 (as required)	
THD : >10	**Power :** 220-240V, 50 / 60Hz
	Maintenance : Bottom Maintenance. The Light engine with driver can be serviced from the bottom , without hampering the ceiling

DRIVER OPTIONS

RF | Zigbee | Triac | Analog 0-10V | DALI

SPECIAL ADDITIONAL FEATURES

Control by Remote, Keypad, APP

Voice Assistance

Scene Control by Remote, Keypad, APP

CCT Tunable

Uniser Industries.Pvt.Ltd
Mumbai, india

www.unisersolar.com | www.uniserledlights.com
Solar Power | LED Lights | Smart Automation

:+91-9867625686 | +91-22-35114465
: support@uniserledlights.com